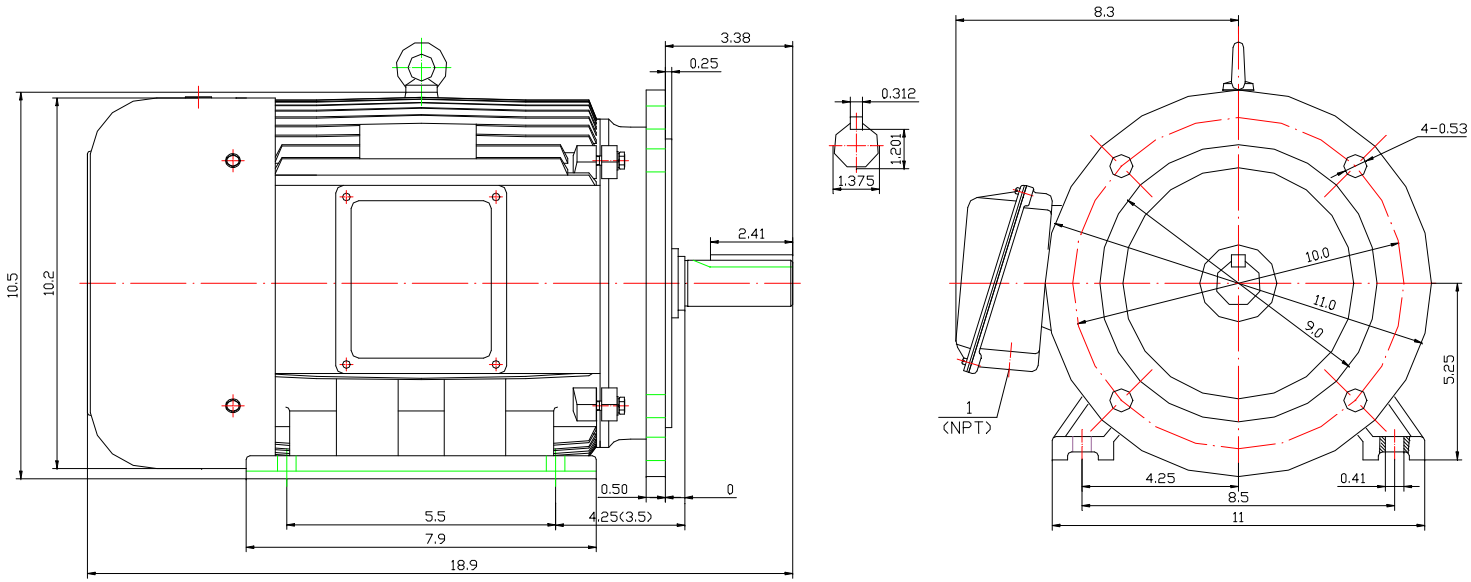

Note: The volue in parenthesis of BA column is for C-Face kit

Max Motion

CAST IRON TEFC
OUTLINE 213TD