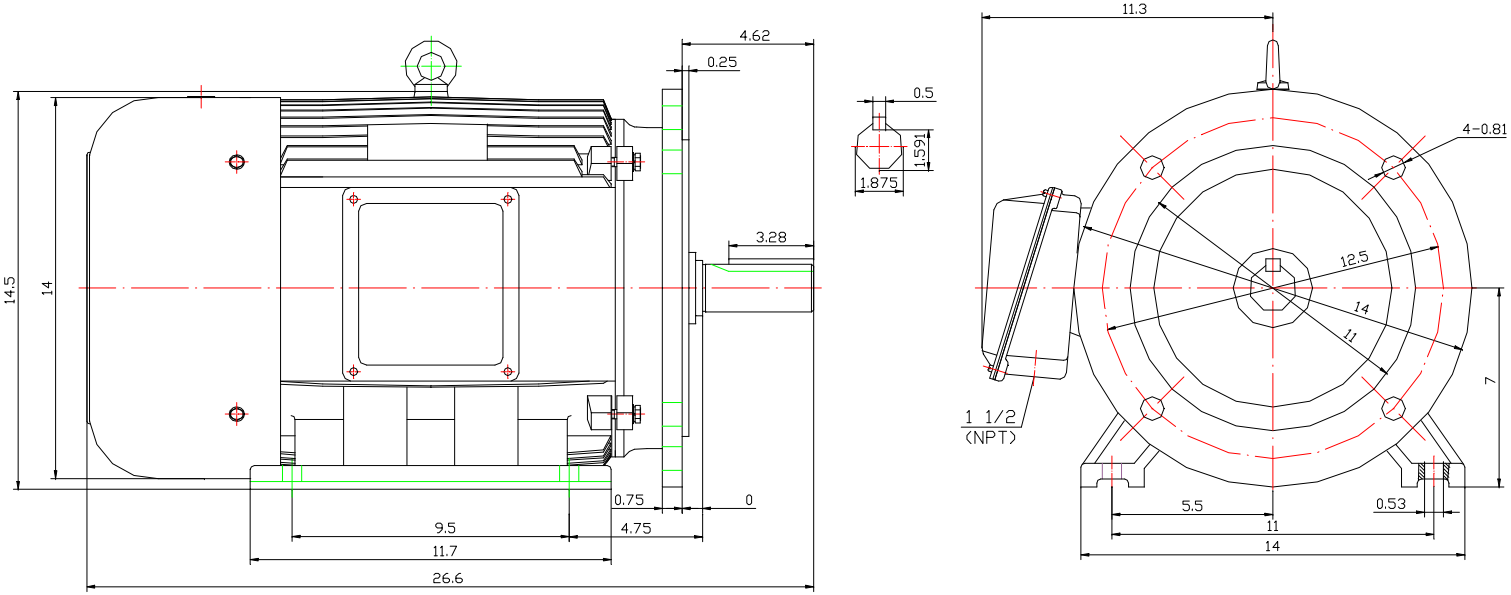

Max Motion

CAST IRON TEFC
OUTLINE 284TD