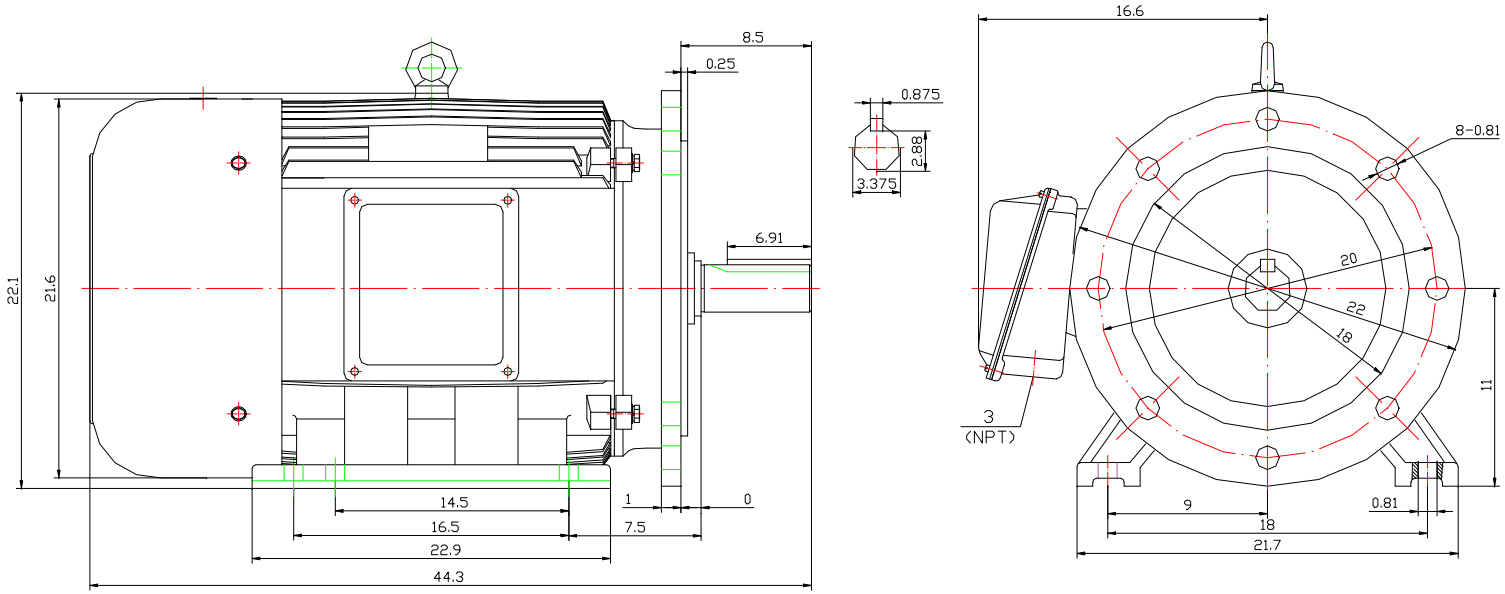


# Max Motion

CAST IRON TEFC
OUTLINE 444TD