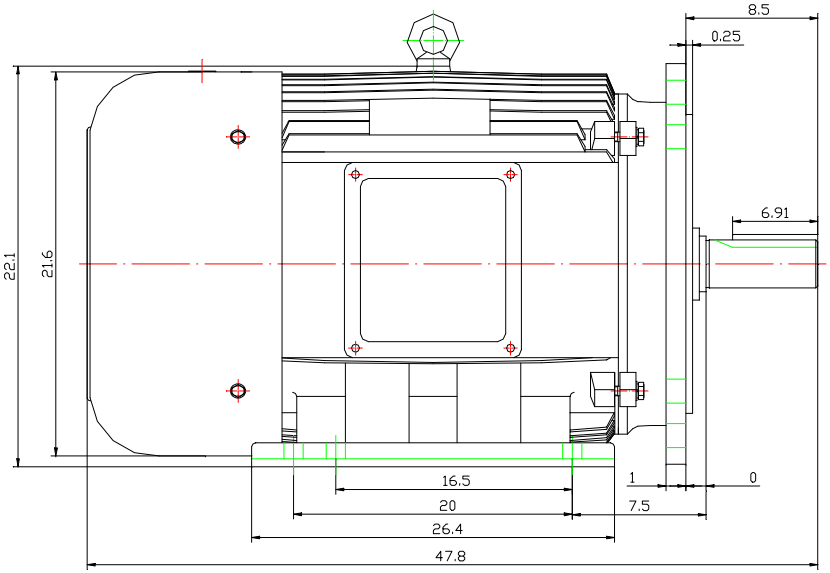

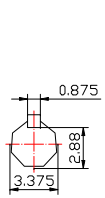

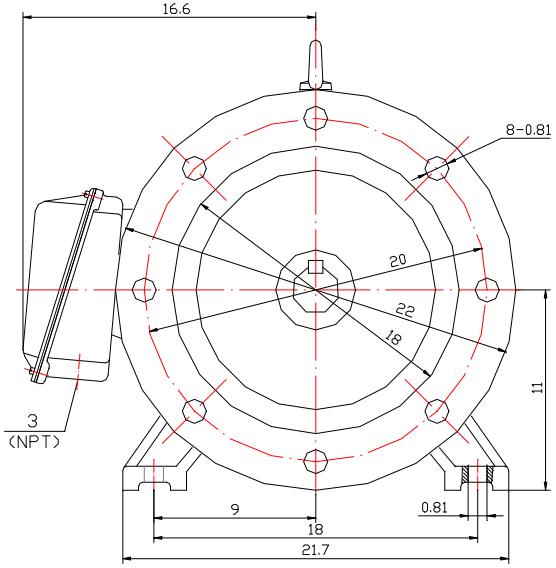

Max Motion

CAST IRON TEFC
OUTLINE 445TD