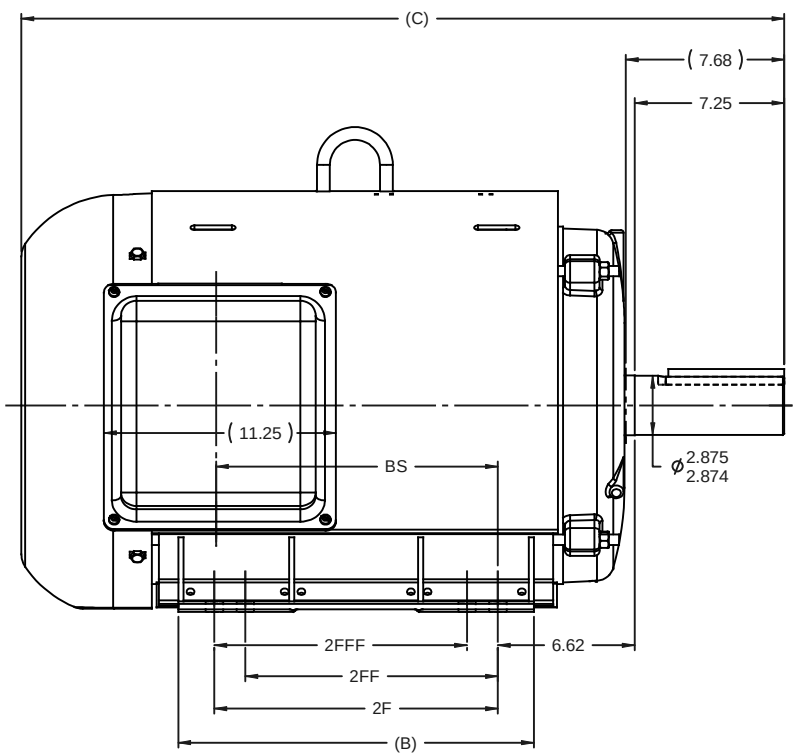

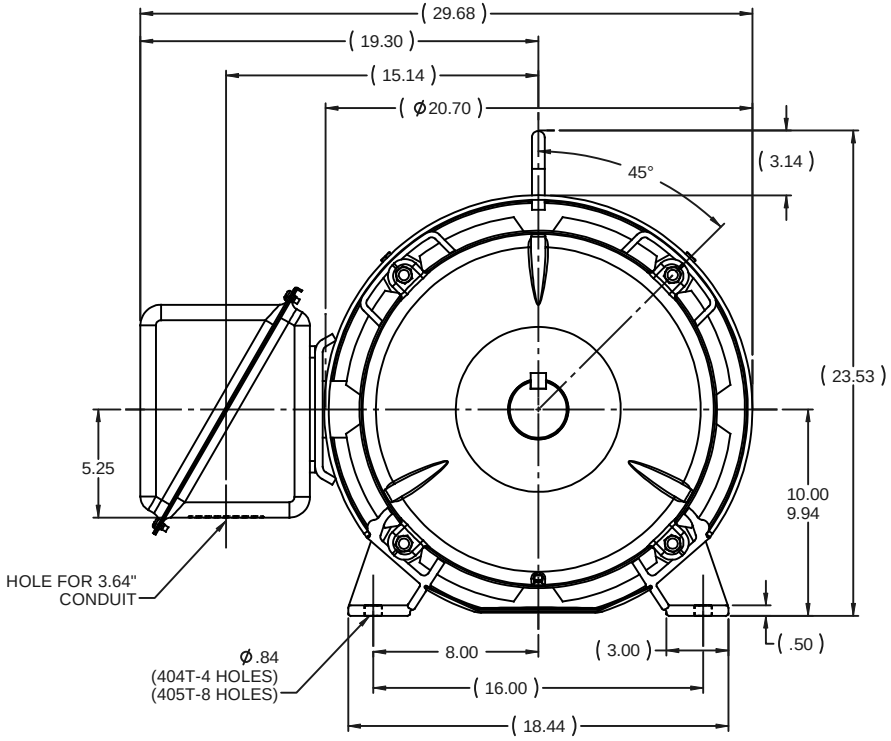

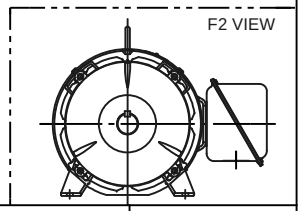

NOTES:
1. CONDUIT BOX CAN BE ROTATED IN 90°STEPS.
2. NAMEPLATES TO BE READ FROM CONDUIT BOX SIDE OF MOTOR.

DASH	FRAME	B	C	2F	2FF	2FFF	BS
1796	404T	15.75	36.90	12.25	- -	- -	12.17
1946	405T	17.25	38.40	13.75	12.25	12.25	13.67

NO	REVISION	BY & DATE	CHK
3	REVISED DIM. TO DESIGN STANDARDS CN29200-2395	NJS 06-05-2002	ML
2	DASH 1796 WAS 405T CN34267	TJB 10-19-2001	
1	NEW DRAWING CN34267	MSG 09-24-2001	

TOLERANCES UNLESS SPECIFIED

DEC	INCHES
.X	±.1
.XX	±.03
.XXX	±.005
.XXXX	±.0005
ANG	±7'30"

Lincoln MOTORS

TITLE OUTLINE
400T FR. - TEFC - UE1

MAT'L
FINISH

DRAWN MSG 09-19-2001
CHK ML 09-19-2001
APPR HNH 09-19-2001
SCALE 1:6
REF B-XJ2F1SS1ME
FMF MU74245
PAGE OF

THIRD ANGLE PROJECTION

RFP 09-19-2001
NETWORK FILE NAME 202211
PREV

SIZE B
DRAWING NO XJ2F1SS1
REV 3

2/18/2009 9:22:14 AM